lumbergautomation
A BELDEN BRAND

D-Size 1 3/8" Mini Power 3- and 4-Pole, Male/Female Receptacle, 1/2" / 3/4" NPT

RSFP | RKFP

RSFP | RKFP

3- and 4-Pole

1 3/8" Power Mini 3- and 4-Pole, 10AWG, Male Receptacle, 1/2" / 3/4" NPT

RSFP

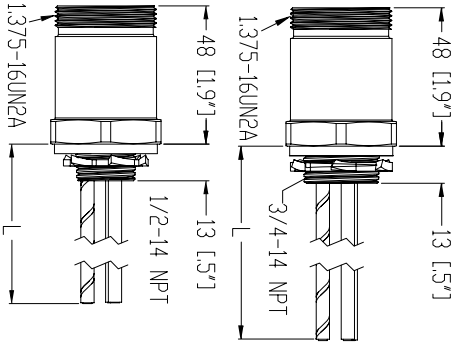

1 3/8" Power Mini 3- and 4-Pole, 10AWG, Female Receptacle, 1/2" / 3/4" NPT

RKFP

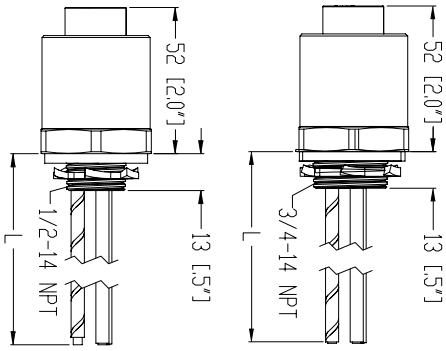

Pin Assignments

Face Views

3 pole
Male / Female

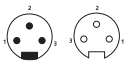

1 = black
2 = green/yellow
3 = white

4 pole
Male / Female

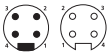

1 = black
2 = green/yellow
3 = red
4 = white

D-Size 1 3/8" Mini Power 3- and 4-Pole, Male/Female Receptacle, 1/2" / 3/4" NPT

RSFP | RKFP

Technical Data

Environmental

Degree of protection	NEMA 6P-IP68, IP67
Operating temperature range	-30°C (-86°F) / +90°C (194°F)

Mechanical

Housing / Molded body	PVC / Black
Contact carrier	CuZn Alloy / Gold over Ni Plated
Shell	CuZn/ Ni
Coupling nut	Steel over Zn plated
Conductor insulation:	PVC

Electrical

Voltage rating	600 V

Approvals

Wire Approvals	UL-1015

Part Number		Pins	Wire conductors	Current Rating	Standard Cable Lengths	Characteristics
Male	Female					
RSFP 3-1/2NPT-800/…M	RKFP 3-1/2NPT-800/…M	3	10AWG	30A	0.5M / 1M / 3M	UL
RSFP 4-1/2NPT-803/…M	RKFP 4-1/2NPT-803/…M	4	10AWG	25A	0.5M / 1M / 3M	UL
RSFP 3-3/4NPT-800/…M	RKFP 3-3/4NPT-800/…M	3	10AWG	30A	0.5M / 1M / 3M	UL
RSFP 4-3/4NPT-803/…M	RKFP 4-3/4NPT-803/…M	4	10AWG	25A	0.5M / 1M / 3M	UL